TECHNICAL DATASHEET

UE Head Projection 500

Item Code : PFPFPJ001219

The UE Head Projection is simple and powerful and guarantees you reliability.
The confetti is sucked by the venturi effect and propelled over a distance of 20 to 25m, depending on the model used.
It will allow you to continuously project a large number of products such as stage confetti, snow paper, flower petals, popcorn, foam balls, etc.
As an option, it is advisable to use our manual feed tank or our suction pipe.

NOMENCLATURE :

- 1 x UE Head Projection 500

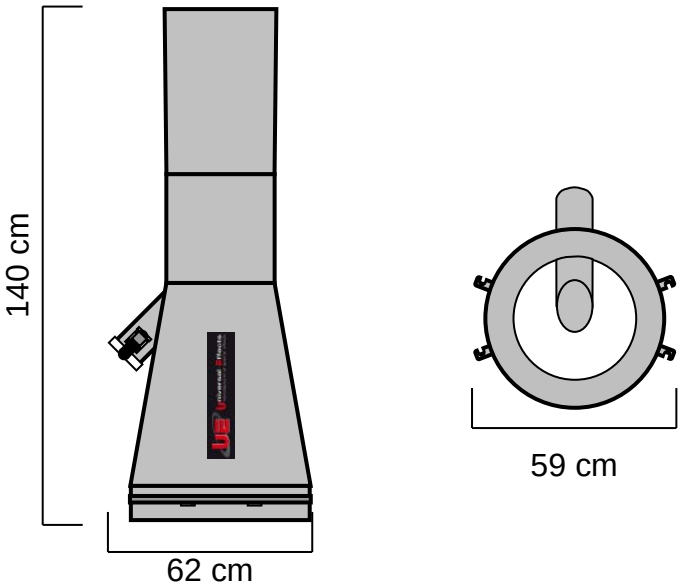

TECHNICAL SPECIFICATIONS :

Size : 140 x 59 x 62 cm
Weight : 10 Kg

FEATURES :

Projection of confetti by venturi system 20 to 25m.

BASES USABLE :

- UE ST- Base 500
- UE XT- Base 500

OPTIONAL ACCESSORIES :

- UE Pipe Projection 500
- UE Manual Tank 500.

CONSUMPTION :

- Consumption of 55mm Show Confetti: 8 Kg / mn

CONSUMABLES :

Confetti, Paper Snow and Plastic, Pop Corn.

Universal Effects, La qualité et l'innovation Fabriqué en France

Universal Effects *est une Marque fabriquée et distribuée par la société* ***Premium Factory SAS***
1 Route Neuve, 71710 MONTCENIS - FRANCE | Email info@premiumfactory.eu | www.premiumfactory.eu
Société Anonyme Simplifié au capital de 1 000 € | Siret 840 703 797 00018 | VAT Nr: FR47840703797