TECHNICAL DIAGRAM – UE ST- BASE 350 & 500

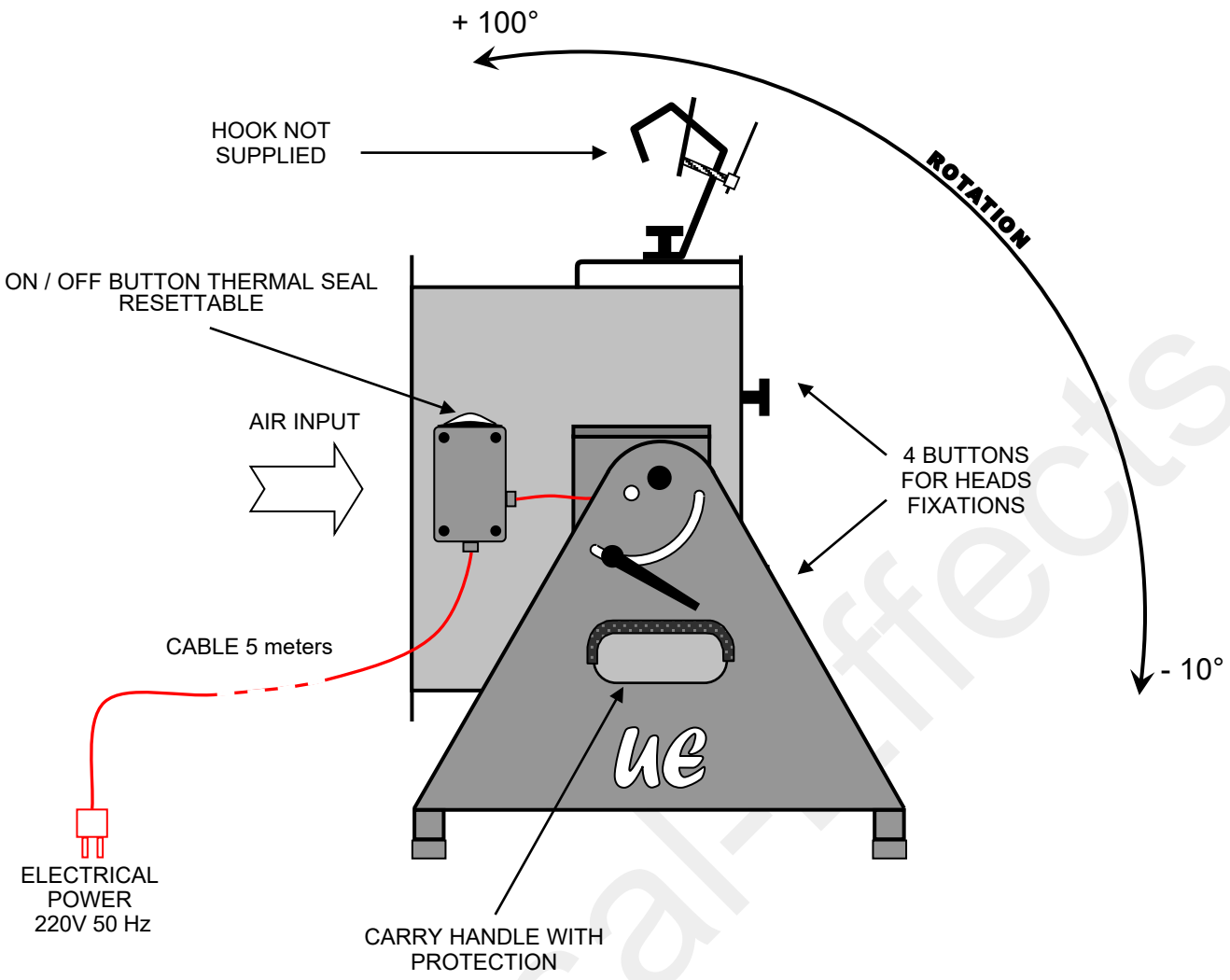

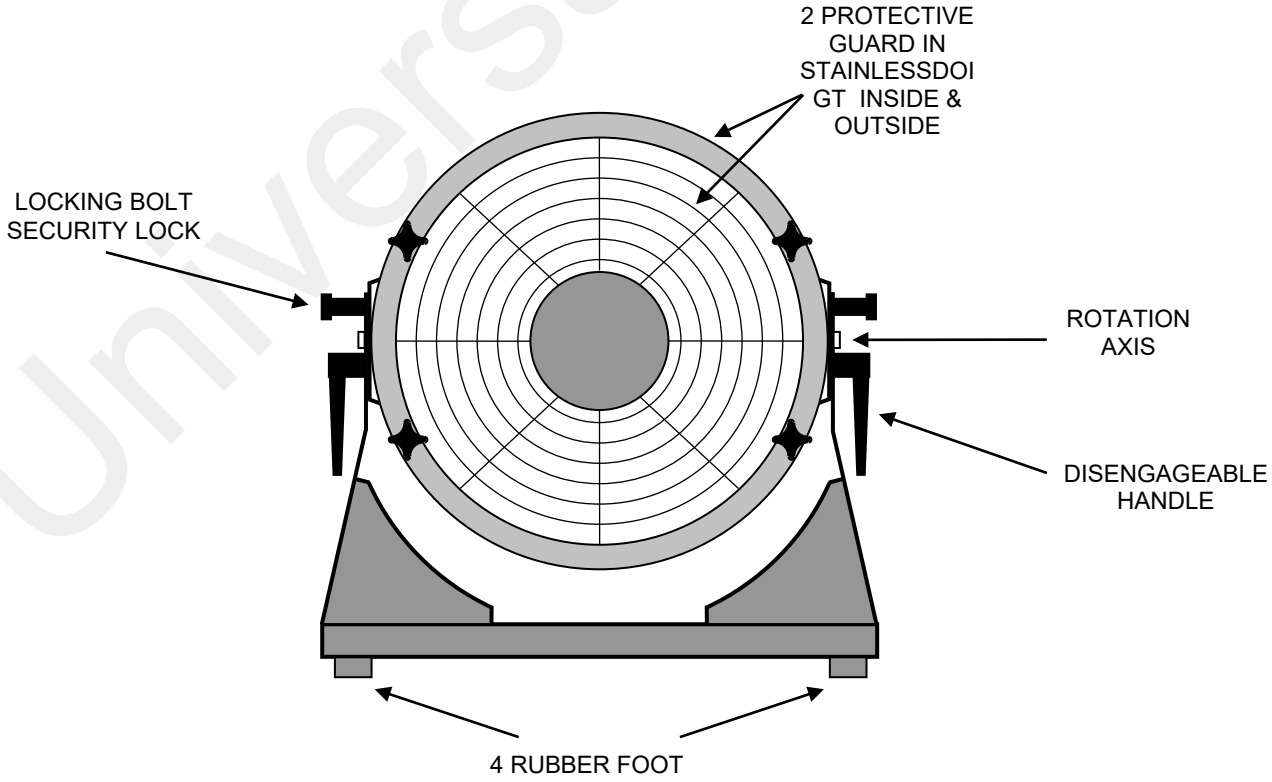

SCREWS AND HARDWARE IN STAINLESS – ALUMINIUM BODY – VERY POWERFUL

COPYRIGHT Premium Factory – Non contractual diagram may be modified without notice – 19.01.01

Universal-Effects

TECHNICAL DIAGRAM – UE ST- BASE 350 & 500 WITH 4 POSSIBLES OPTIONS

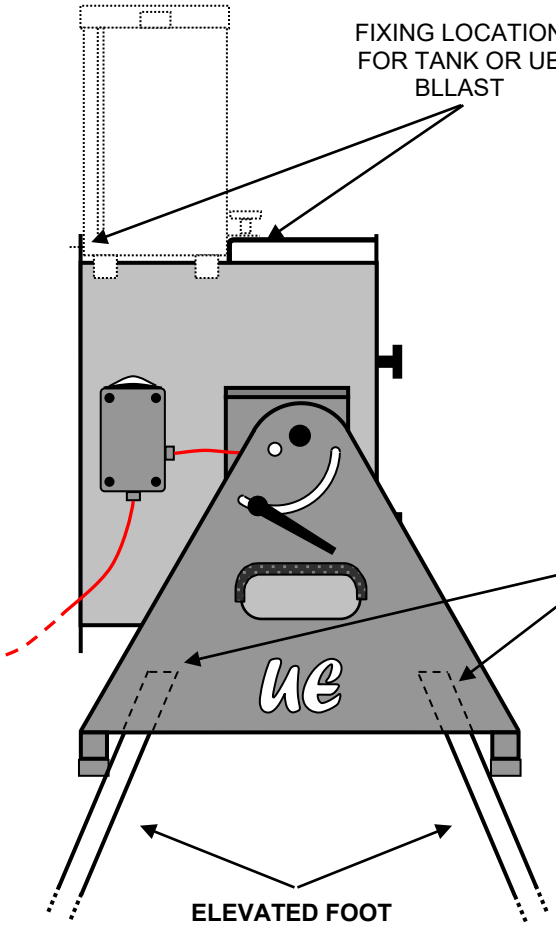

ELEVATED FOOT
(LENGTH 50, 75 OU 100 cm)
REF : UE FEET 50, 75, 100

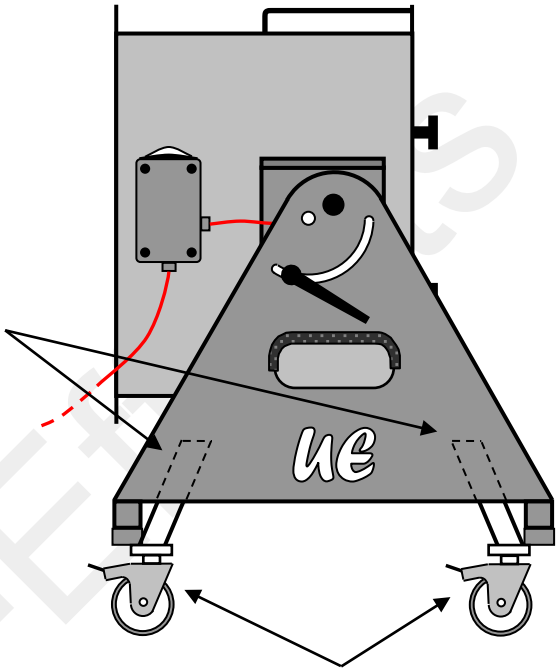

WHEELS FOOT
REF : POWER WHEEL
FEET

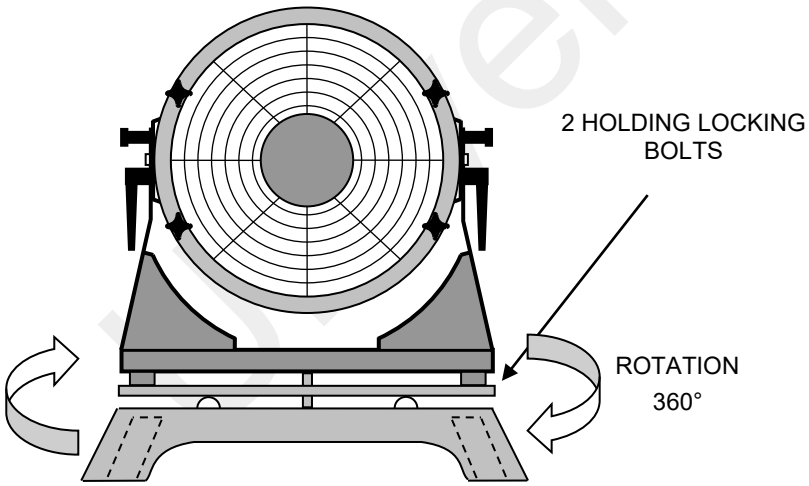

SHOOT TOWER
REF : UE SHOOT TOWER 350 & 500
OPTIONS : ELEVATED FOOT
WHEELS FOOT

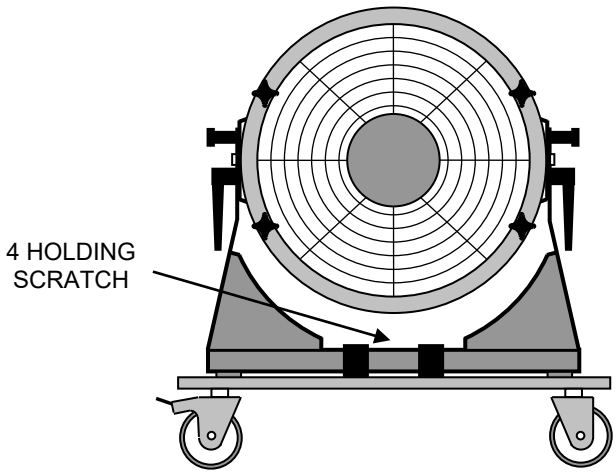

SKATEBOARD
REF : UE SKATE BOARD 350 & 500

SCREWS AND HARDWARE IN STAINLESS – ALUMINIUM BODY – VERY POWERFUL

COPYRIGHT Premium Factory – Non contractual diagram may be modified without notice – 19.01.01

COMBINATIONS WITH UE ST- BASE 350 & 500

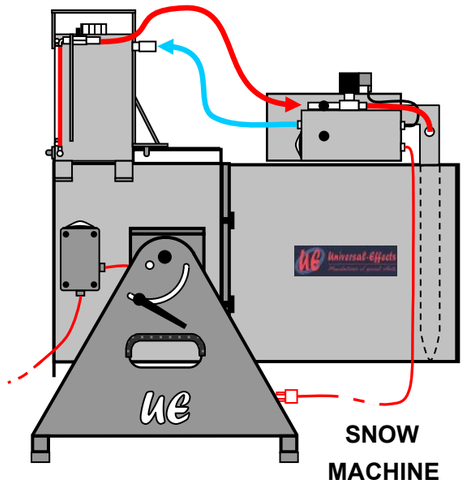

SNOW MACHINE

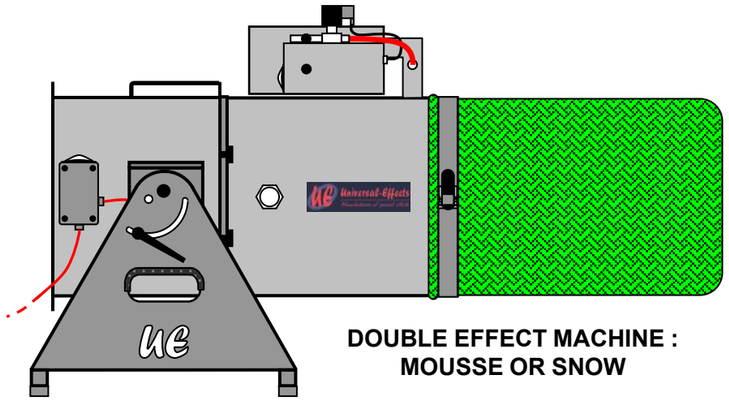

DOUBLE EFFECT MACHINE : MOUSSE OR SNOW

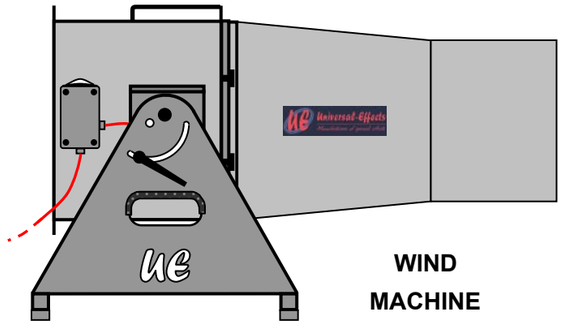

WIND MACHINE

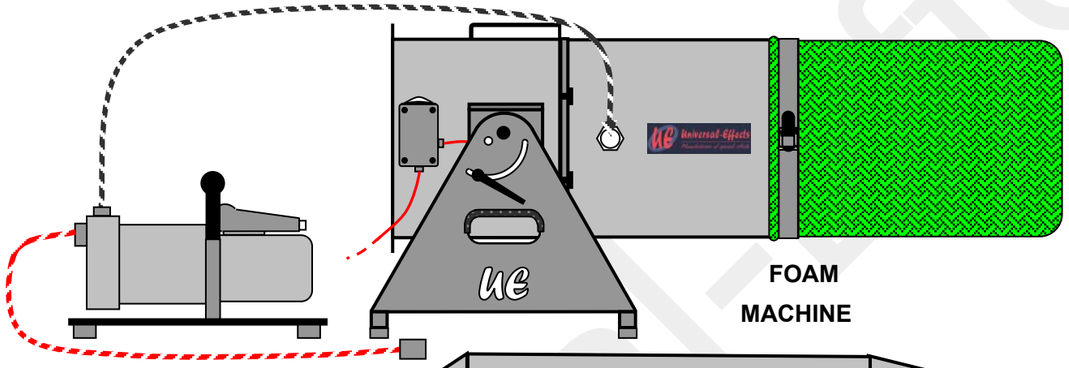

FOAM MACHINE

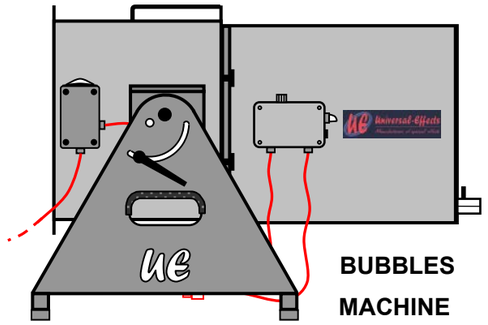

BUBBLES MACHINE

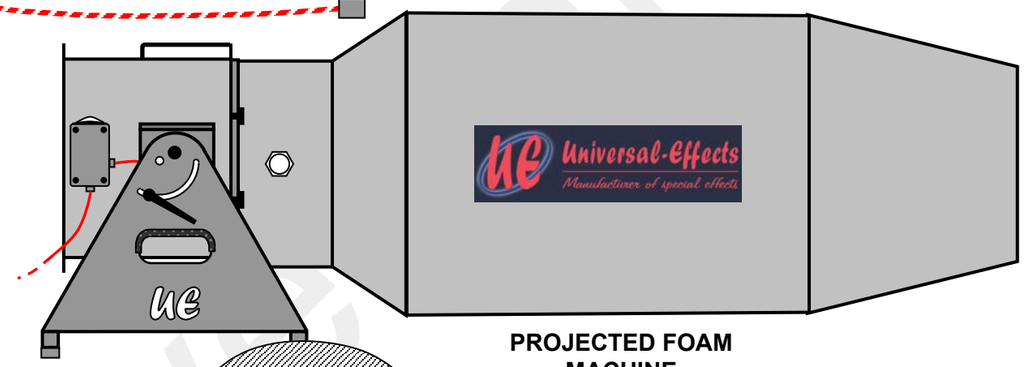

PROJECTED FOAM MACHINE

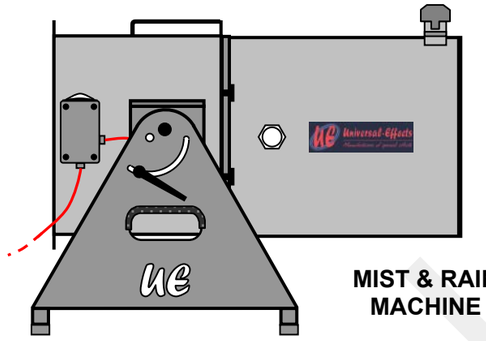

MIST & RAIN MACHINE

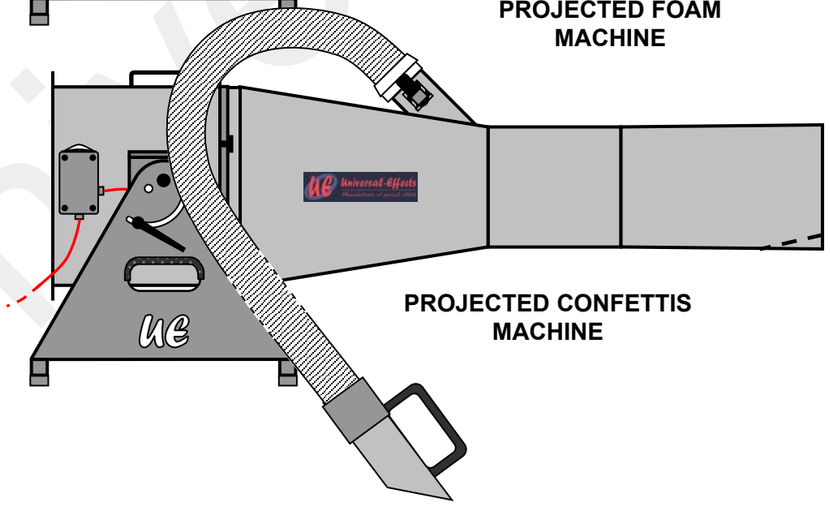

PROJECTED CONFETTIS MACHINE

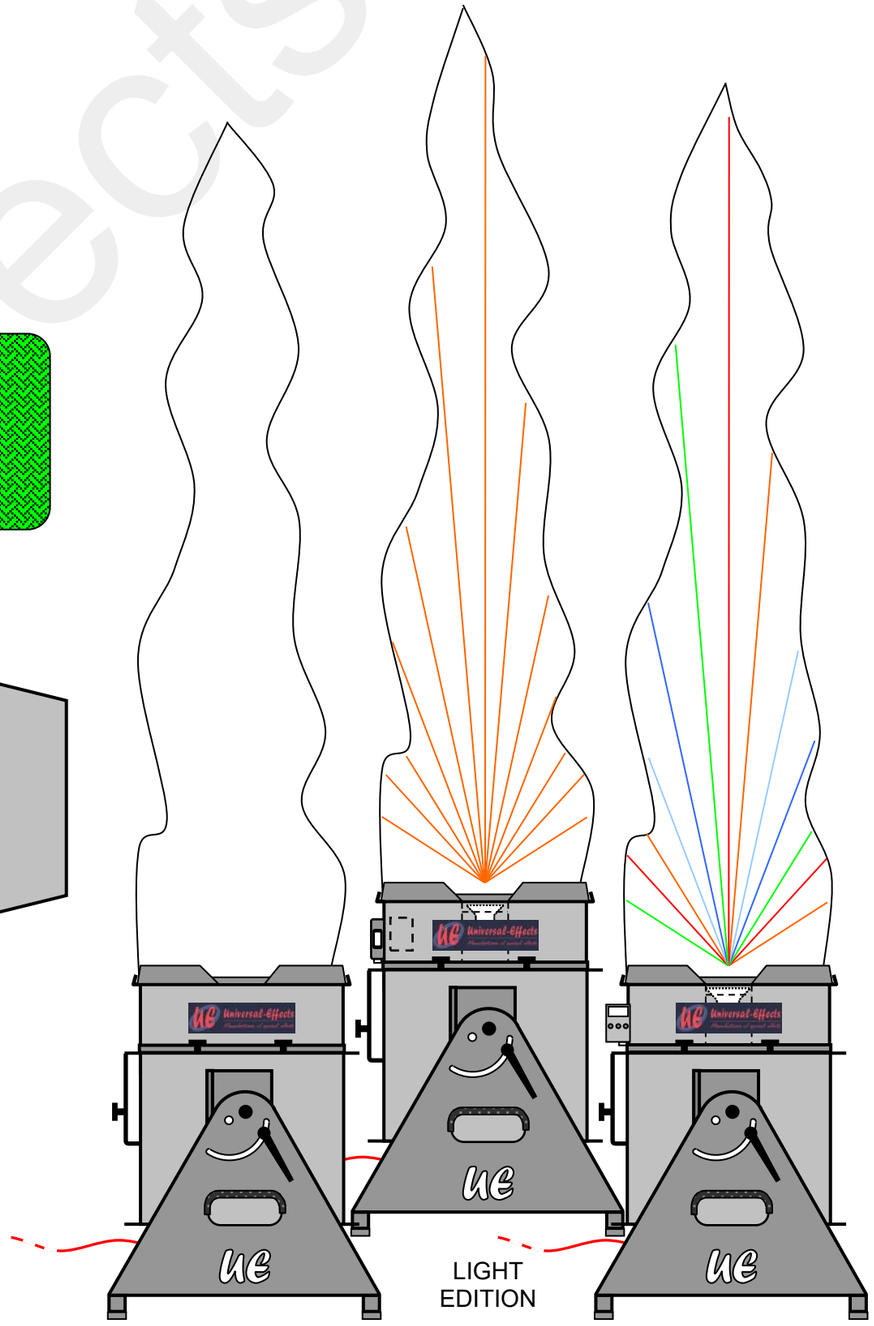

AIRFLAME MACHINE

COPYRIGHT Premium Factory – Non contractual diagram may be modified without notice préavis – 19.01.01

TECHNICAL DIAGRAM – UE HEAD AIRFLAME

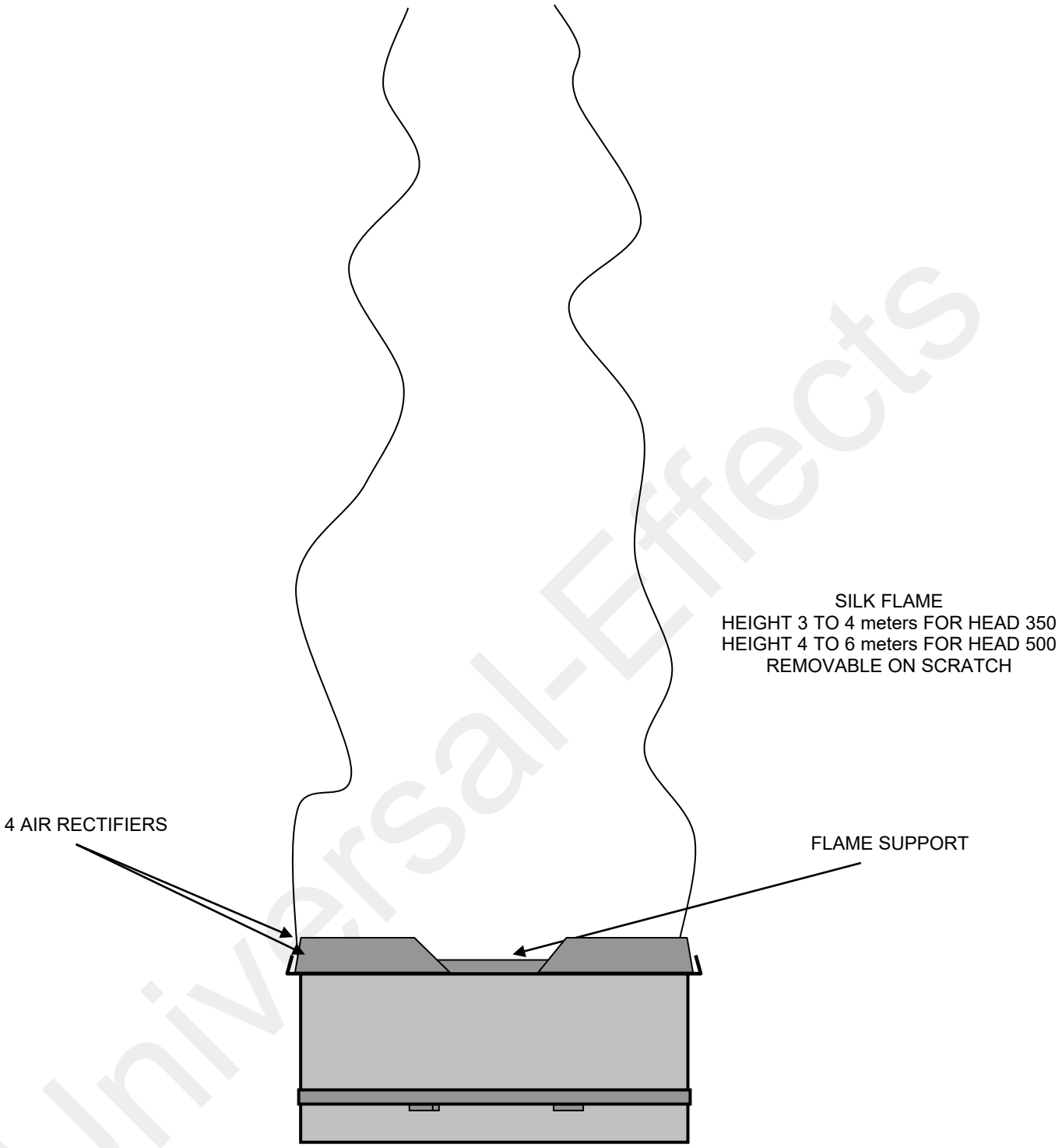

STAINLESS SCREWS & HARDWARE - ALUMINUM BODY

Universal-Effects

Copyright Premium Factory – Non contractual diagram. Can be modified without notice – 19.01.01